NUMINOS® XS | 48V, DALI

NUMINOS® XS 48V TRACK, DALI, spot, white / chrome, 8.7 W, 730 lm, 3000 K, CRI 90, 20°

High-quality minimalism across the board: the compact NUMINOS® spotlights provide elegant yet effective illumination with a 48V track system. They also perfectly complement the most discerning room designs with their clear, cylindrical shape. The brightness, light colour (2700 K/3000 K/4000 K) and half-peak divergence (20°/ 40°/55°) of these DALI-compatible spotlights can be adjusted as desired. The aluminium housing is available in black, white and chrome. A CRI value over 90 ensures natural colour reproduction. The adjustable and pivoting spotlights are quick and easy to install thanks to the track adapter.

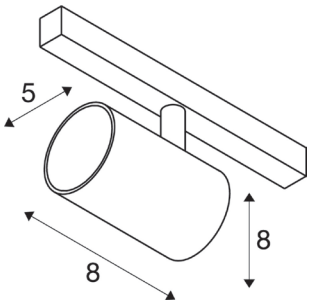

Light source

798303	A↑G F

Item no.	1006680
Lamps included	No
Number of different light outlets	1
Rotating or tilting	rotary bar and tiltable
IP Code	IP20
Impact resistance class	IK02
Impact resistance	0.2 Joule
Dimmable	true
Dimming technology	DALI 2
Primary nominal voltage	48V DC
Secondary power / voltage	200 mA
Safety class	III
Wattage	9 W
Minimum ambient temperature	-20°C
Maximum ambient temperature	35°C
Beam angle	20°
Color	white/chrome
CRI	90
UGR ≤	16
LXXBXX data	L80B50
Service life	50 000 h
Risk Group	2
Height	8 cm
Diameter	5 cm
Net weight	0.19 kg
Gross weight	0.27 kg
BIG WHITE Page	443

Accessories

1005612	NUMINOS® XS, diffuser
1005613	NUMINOS® XS, transparent diffuser
1005614	NUMINOS® XS, frosted diffuser
1005615	NUMINOS® XS, black diffuser