

STREET A MINI 135 730 | LENS906

STREET A, MINI 135 730 LENS906

The STREET A MINI 135 730 LENS906 is a luminaire head specifically designed for outdoor use. Typical applications include street lighting and public pathways, where a robust and durable lighting solution is required. The luminaire offers a luminous flux of 13,500 lumens and a declared service life of 100,000 hours. The housing is made of aluminium, with a glass cover. With dimensions of 66.4 cm in length, 25.1 cm in width, and 13.2 cm in height, the luminaire is compactly designed. It features an IP66 rating, providing reliable protection against dust ingress and powerful water jets, as well as an IK09 impact resistance rating. These characteristics make the luminaire resistant to environmental influences and mechanical stresses.

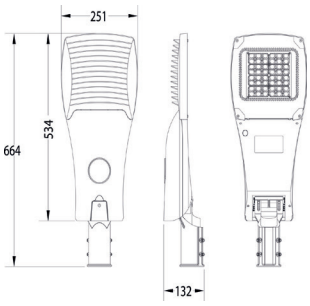

Item no.	1011740
Number of different light outlets	1
IP Code	IP66
Impact resistance class	IK09
Impact resistance	10 Joule
Primary nominal voltage	220-240V V ~ 50/60Hz
Secondary power / voltage	610 mA
Safety class	I
Wattage	90 W
Minimum ambient temperature	-40°C
Maximum ambient temperature	50°C
Number of luminaires at LS B16A	10.0
Number of luminaires at LS C16A	17.0
Level of inrush current	41.6 A
Duration of inrush current	238 µs
Beam angle	145°
Color	gray
CRI	70
LXXBXX data	L80B50
Service life	100 000 h
Risk Group	1
Length	66.4 cm
Width	25.1 cm
Height	13.2 cm
Net weight	5.8 kg
Gross weight	6.1 kg